THADDEUS S C LOWE

By EurIng Brian Roberts, CIBSE Heritage Group

Professor Thaddeus Sobieski Constantine Lowe, 1832-1913

Thaddeus Lowe was born 20 August, 1832 in Jefferson Mills, Coos County in New Hampshire. He was said to have been largely self-educated in chemistry, meteorology and aeronautics. Throughout his life he engaged in a wide variety of activities including hydrogen gas manufacture, balloon building and aerial reconnaissance, the invention and patenting of ice machines, building of ice-making plants, use of refrigerated ships, banking, and railway construction.

At the start of the American Civil War, Lowe considered it his patriotic duty to offer his services to President Abraham Lincoln for the purposes of carrying out reporting, on behalf of the Union Army, the location and movement of Confederate troops from the air using his balloon. In July 1861, Lincoln appointed Lowe Chief Aeronaut of the Union Army Balloon Corps. While he achieved some success in this role, his efforts were not always fully appreciated by all members of the military. Disputes over his operations and pay scale forced him to resign in 1863.

Lowe's success with aerial balloons had relied on his expertise and experience in the manufacture, storage and use of hydrogen gas. (At one time, he proposed to cross the Atlantic in a special large balloon of his design). He continued with his work after the war having invented the gas-water process by which large amounts of hydrogen gas could be produced from steam and charcoal. His patents on this process and on his ice-making machines made him a millionaire.

It seems he made a carbon dioxide refrigerating compressor in 1865 or 1866, obtaining three US Patents in 1867, and went on to use it to manufacture ice, firstly in Dallas, Texas, then in Jackson, Mississippi. Another report suggests that after moving to California in 1887, he opened several ice-making plants. But at this point Lowe seems to have lost interest in refrigeration and pursued other interests. He built himself a 24,000 sq ft house in Pasadena and founded the Citizen's Bank of Los Angeles. From 1891, he embarked on ambitious plans for a scenic mountain railway. After a first successful opening in 1893, he continued to support further expansion but the financial drain proved too much and by 1899 he had gone into receivership.

Thaddeus Lowe spent his remaining days living at his daughter's home in Pasadena where he died at the age of 80 on 16 January, 1913.

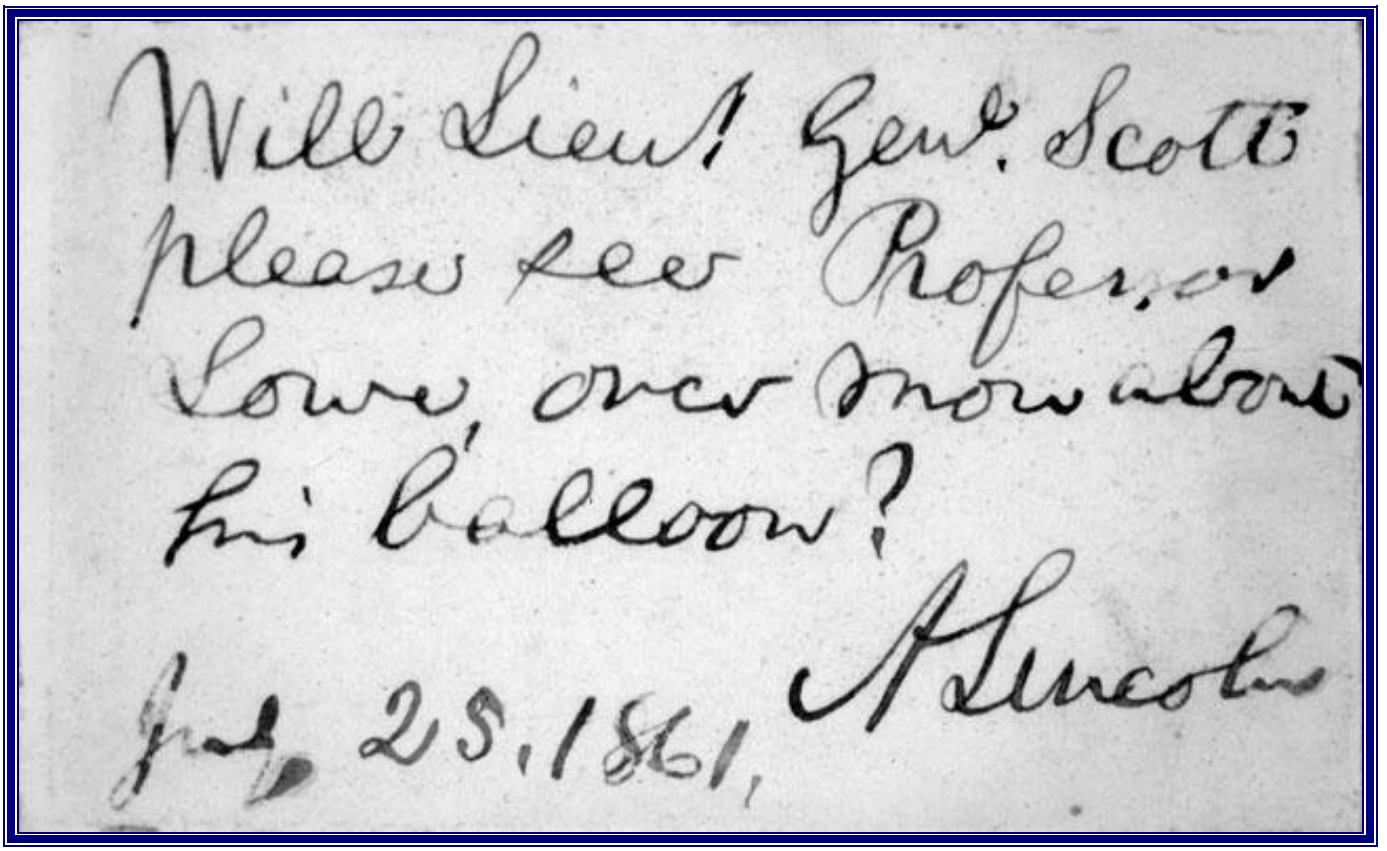
Will Lieut. Genl. Scott please see Professor Lowe, over snow about his balloon?

Feb. 25, 1861. A. Lincoln

President Lincoln's note, of 1861, with the suggestion to consult Lowe over the possible military use of his balloon

Lowe's hydrogen vehicles outside the Capitol building

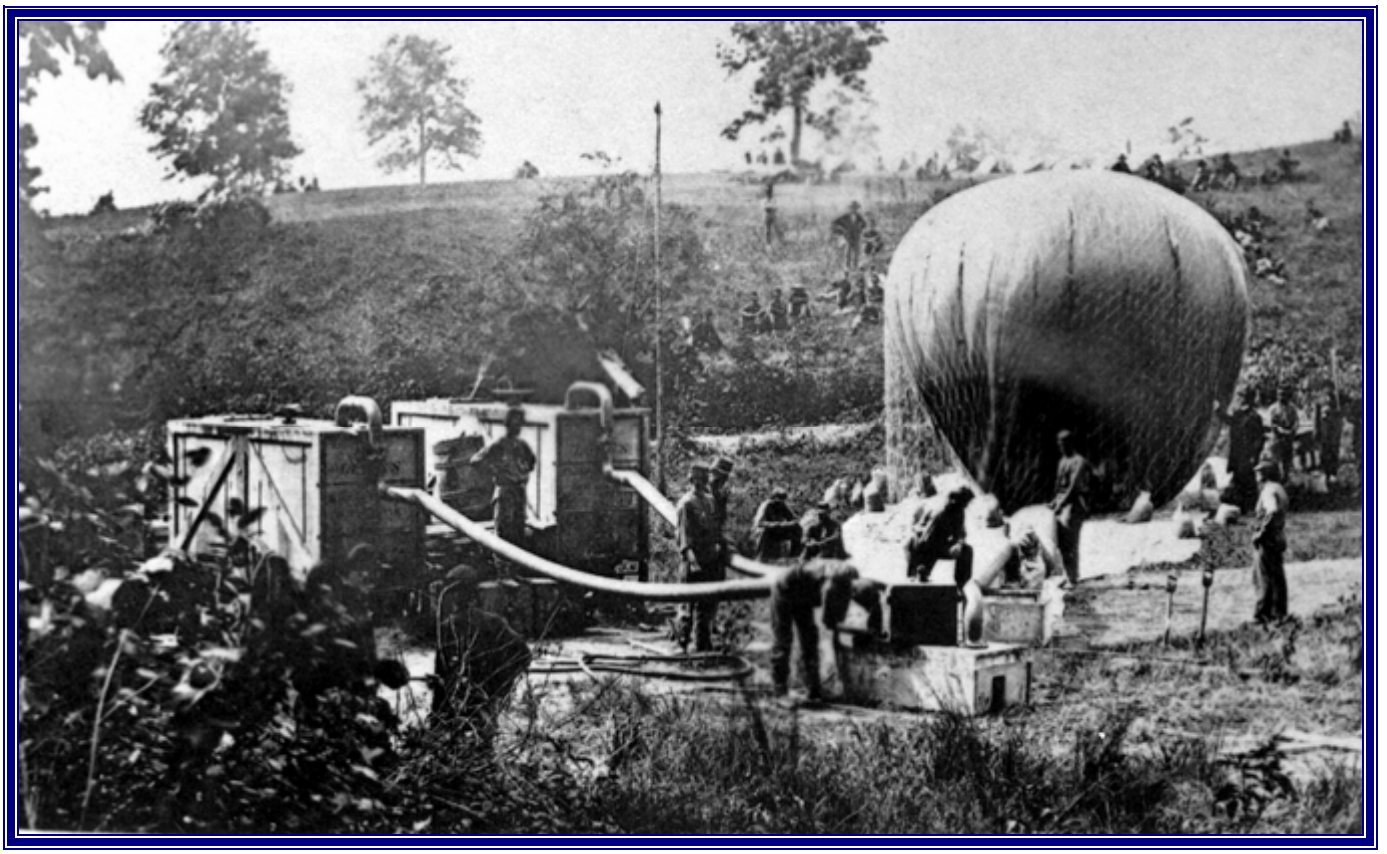

Lowe's balloon and hydrogen apparatus in use during the Civil War

T. S. C. LOWE

Ice Machine.

No. 63,404.

Patented April 2, 1867.

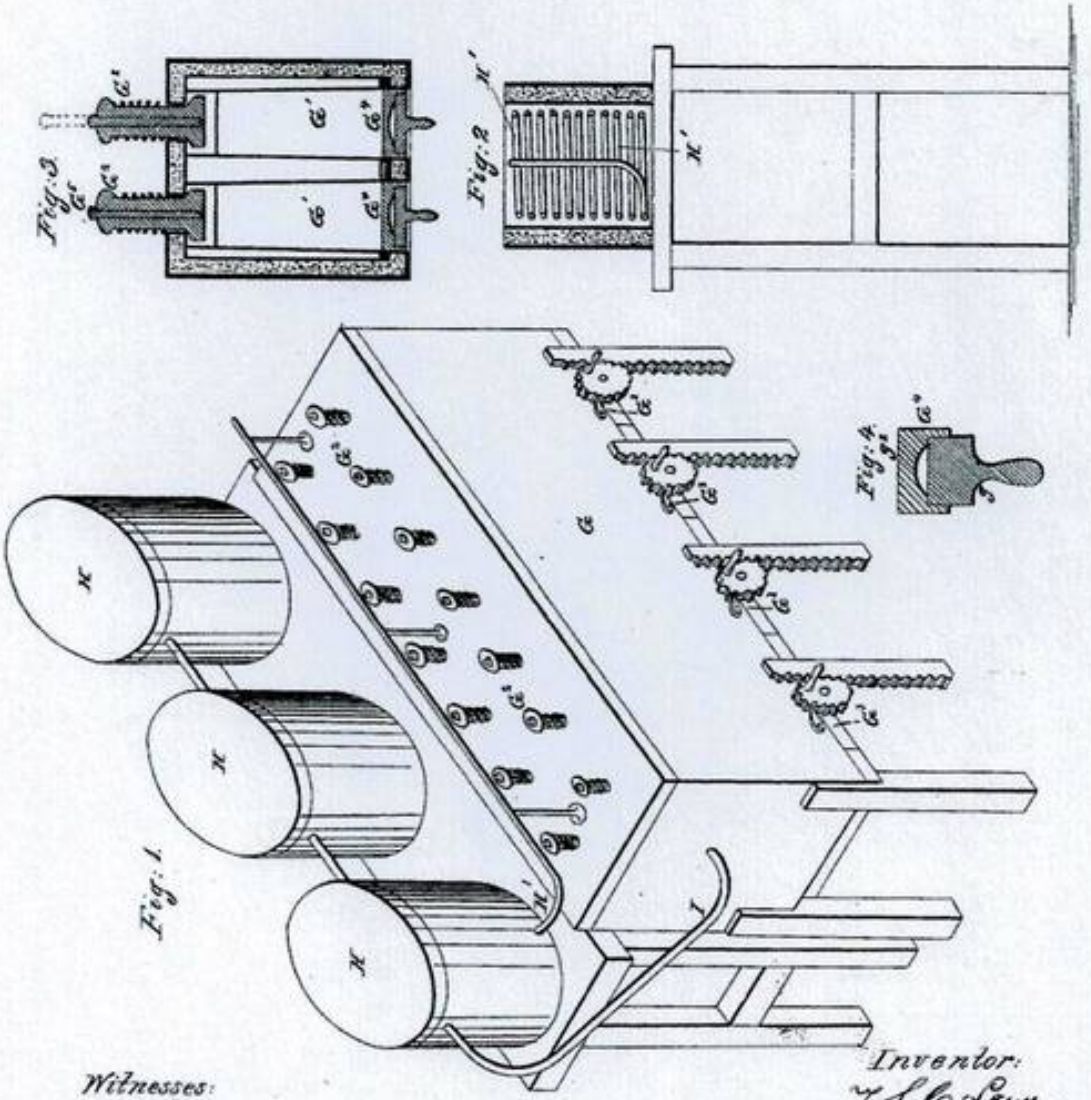

Witnesses:

L. A. Murphy

Inventor:

T. S. C. Lowe

by D. P. Holloway Jr.

his Atty.

United States Patent Office.

THADDEUS S. C. LOWE, OF NEW YORK, N. Y.

Letters Patent No. 63,404, dated April 2, 1867.

IMPROVEMENT IN APPARATUS FOR THE MANUFACTURE OF ICE.

The Schedule referred to in these Letters Patent and making part of the same.

TO ALL WHOM IT MAY CONCERN:

Be it known that I, THADDEUS S. C. LOWE, of the city, county, and State of New York, have invented a new and useful Improvement in Apparatus for Manufacturing Ice; and I do hereby declare that the following is a full, clear, and exact description of the same, reference being had to the annexed drawings, making part of this specification, in which—

Figure 1 is a perspective view.

Figure 2 is a vertical section of the water-cooler.

Figure 3 is a vertical transverse section of the expansion-chamber; and

Figure 4 is a vertical section of the stopper.

The same letters are employed in all the figures in the indication of parts which are identical.

The subject-matter of this application is the expansion-chamber and water-cooler of my apparatus for manufacturing ice, upon which an application is now pending; but its use is not limited to my peculiar process of manufacture as therein claimed, but it is equally applicable to other processes, and I shall therefore claim so much as is new in this apparatus, however applied to use. G is the expansion-chamber, in which the frigorific effects are produced by the expansion of condensed gases or volatile liquids. I employ in my process carbonic acid gas, first condensed by mechanical pressure to the form of a liquid, and then, the pressure being withdrawn, allowed to resume its normal state by expansion within the chamber G. Other gases, such as ammoniacal gas, or volatile liquids, such as ether, evaporated under exhaustion, have been employed in other processes, and may be used in this apparatus. In the other processes the frigorific effects are produced by cooling non-congealable liquids, and then causing them to flow around vessels containing the substances to be cooled or frozen. One of my improvements consists in bringing the cold vapors or gas into immediate contact with the vessels containing the water or other substances to be cooled or frozen. The expansion-chamber is therefore hermetically closed; and, to prevent waste by the effect of external heat, I form the casing thereof with double sides, ends, top, and bottom, and fill the intermediate space (say six or eight inches through) with closely pressed raw wool. Within this chamber I place cylindrical pipes G^1, which I shall call the freezers. These are made, in my apparatus, of sheet copper, highly polished on the inside. Where ammoniacal gases or other substances are employed which would act chemically on the copper, it must be coated, or other metals substituted. I prefer copper because of its composition, cheapness, and its being an excellent conductor of heat. The freezers G^1 are covered above, having only an opening large enough to receive the plunger G^2, which is supported by a spiral spring, but may be pushed down so as to start the block of ice when formed in the freezer. There is a hole through the plunger G^2 through which water may be introduced into the freezer. This hole is closed by the plug G^3. To facilitate the withdrawal of the block of ice when formed, the freezer is made to expand in diameter gradually from top to bottom, and it is closed by the stopper G^4. In order to permit the expansion of the water when forming into ice, which might otherwise injure the sides of the freezer, this stopper should be made elastic so as to yield to this expansion. To this end it may be formed as shown in fig. 4. The part G^2 is made of India rubber, fitting the mouth of the freezer tightly; it rests upon the wooden piece G^1 which enters a cavity formed in the base of the rubber, but not entirely filling the same, so that an air-chamber may be left between the wood plug and elastic stopper. These plugs are held in place by the falling-doors G^5. The water is supplied to the freezers from the water-coolers H, through a pipe which may be so constructed as to fill as many of the freezers at the same time as may be desired. For convenience I propose to construct the expansion-chamber with several falling-doors under the freezers, so that while the attendants are removing the ice from one set of freezers, the others may not be open to the atmosphere. As the gas or vapor is raised in temperature by taking up the heat from the water, its place should be supplied by new and colder gas or vapor, by the admission of which it is driven or drawn by a pump, or by the force of both combined, through the pipe I. In order to utilize this gas or vapor, which is very cold, I form the pipe I in coils in a series of tubs or tanks, H, filled with water. These tanks communicate by open pipes, the water flowing through the series in the reverse direction to that of the escaping gas or vapor from the chamber G. Their action should be so regulated that the water in the tank from which the pipe H^1 supplies the freezers should be brought as near as possible to, but not allowed to fall below, the temperature of 32° Fahrenheit. The water, being thus nearly at a freezing temperature, should be

slowly admitted into the freezers, and it will freeze almost if not quite as fast as it enters. The pipe I, after passing through the cooling tanks, communicates directly with the pump or intermediately with a gasometer. The tanks should be protected in the same manner as the expansion-chamber against external heat.

Having fully explained my improved apparatus, what I claim as new, and as of my invention, and desire to secure by Letters Patent, is—

1. The expansion-chamber G, in an apparatus for manufacturing ice by artificial process, when constructed with fixed freezers G^1, around and in immediate contact with which the cold gas or vapor circulates, substantially as described.

2. In such an apparatus, fixed freezers G^1, in combination with plungers G^2, arranged to operate substantially as and for the purpose set forth.

3. The elastic stoppers G^4, when used for the purpose and substantially as set forth.

4. The combination of fixed freezers G^1, elastic stoppers G^4, and falling-doors G^5, or their equivalents, substantially as and for the purpose set forth.

5. In combination with the expansion-chamber G, the eduction pipe I, and water-tanks H, enclosing the same for the utilization of the cold gas or vapor passing from the expansion-chamber, so as to reduce the temperature of the water before entering the freezers, substantially as set forth.

In testimony whereof I have signed my name to this specification in the presence of two subscribing witnesses.

T. S. C. LOWE.

Witnesses:

R. MASON,

C. F. CLAUSEN.

T. S. C. Lowe.

Ice Machine.

No. 63,405. Patented Apr. 2, 1867.

Fig. 1.

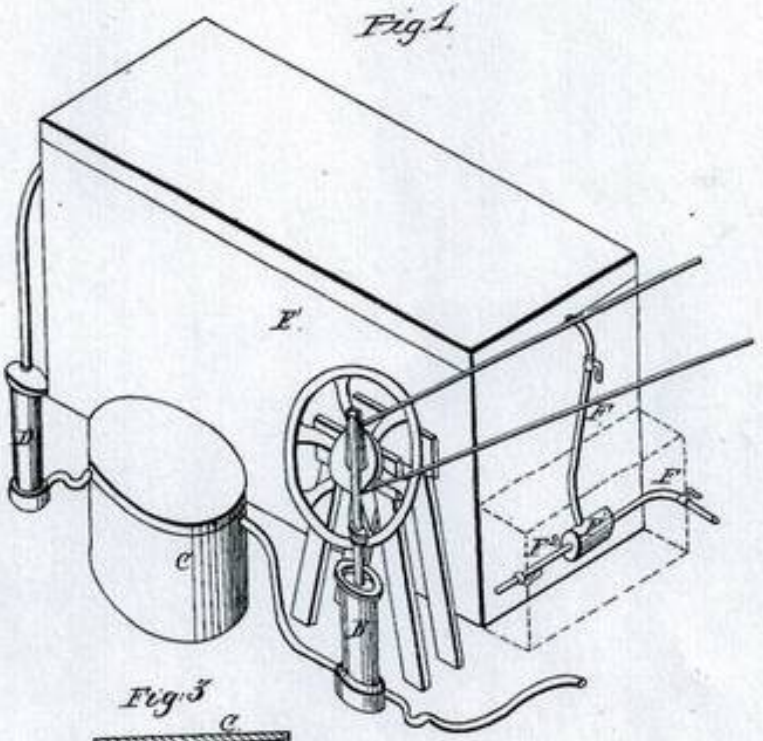

Fig. 3

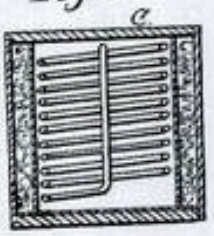

Fig. 2.

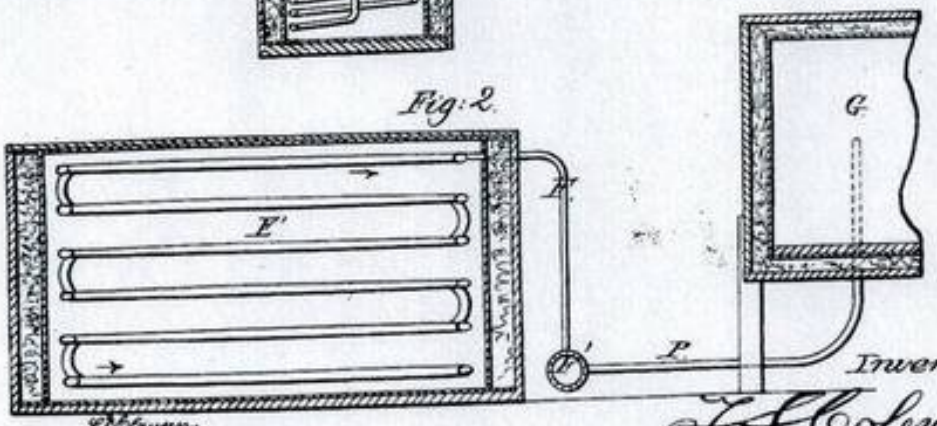

Witnesses: C. Blauer. L. A. Murphy

Inventor: T. S. C. Lowe. D. D. Holloway, Jr. Atty

United States Patent Office.

THADDEUS S. C. LOWE, OF NEW YORK, N. Y.

Letters Patent No. 63,405, dated April 2, 1867.

IMPROVED APPARATUS FOR CONDENSING CARBONIC ACID, AND FOR DRAWING OFF AND APPLYING THE SAME FOR COOLING AND FREEZING.

The Schedule referred to in these Letters Patent and making part of the same.

TO ALL WHOM IT MAY CONCERN:

Be it known that I, THADDEUS S. C. LOWE, of the city, county, and State of New York, have invented a new and useful Process and Apparatus for Condensing Carbonic Acid Gas into a Liquid, and retaining the same under pressure, and for drawing the same off in the liquid form for expansion in a freezing apparatus; and I do hereby declare that the following is a full, clear, and exact description of the same, reference being had to the annexed drawings, making part of this specification, in which—

Figure 1 is a perspective view.

Figure 2 is a vertical longitudinal section of the condenser, a transverse section of the gauge, and shows the end of the expansion-chamber; and

Figure 3 is a vertical section of the cooler.

The same letters are employed in all the figures in the indication of identical parts.

In an application for Letters Patent filed in the United States Patent Office on the fifteenth day of December, 1866, I set forth in full my new and improved process for manufacturing ice, in which the frigorific effects of the expansion of carbonic acid gas which has first been reduced by mechanical pressure to a fluid state are utilized by means of a complete apparatus therein described. This application is intended to apply to so much of said process and apparatus only as is employed in the condensation and preservation under pressure of the carbonic acid, and the withdrawal of the fluid from the receiver in proper quantities for filling the expansion-chamber.

I will proceed to describe the same, so that a person skilled in the art may manufacture and operate the same.

Two modes are known for the condensation of carbonic acid gas—one by positive pressure applied mechanically, the other by the process of Thelovier, (1835,) in which the generation of the gas in a close vessel is made to furnish the force by which it is condensed. As it is essential to the economical operation of the process that the carbonic acid should be used over and over again, the process of condensation introduced by Thelovier is not applicable. I therefore make use of a pneumatic pump, B, which must be so constructed and driven as to be capable of producing a pressure of about forty atmospheres. This pump must have an induction pipe with a valve opening inwardly, and an eduction pipe opening outwardly. For its more economical working, I propose to so construct the piston-rod that the piston may be carried to and against the bottom of the cylinder; but this will be more fully set forth in another application to be made on the pump. I have experimented with many gases, but find that they are destructive to the pump. Carbonic acid seems to act as a lubricator, so that the cylinder is not injured in its use. I use a single-action pump, the cylinder being open above. On this should pour a stream of cold water. The pump should be placed in a tub, to be kept filled with water. As a considerable amount of heat is evolved in the compression of the gas, in order to its economical condensation the gas must be cooled. To this end I pass the eduction pipe, formed in a coil, through the tank C, through which passes a constant stream of cold water with which the tank is filled. This water takes up the calorie from the gas. It is also important that there should be no water in the gas, as this, by freezing, would close the pipes. I therefore place a water-trap in the pipe after it leaves the cooler, so that the water can be drawn from the pipe. When the gas has once become perfectly dry, as it is repeatedly used in the circuit, it cannot acquire moisture. D is a cylindrical vessel used as a dryer, through which the gas passes, the water or moisture being taken up by chloride of sodium or other suitable absorbent, with which the dryer is filled. The pipe then leads into the condensing coil E′, placed within the case E. As this coil is subjected constantly to a pressure of nearly forty atmospheres, or six hundred pounds to the square inch, and may be required to sustain a greater pressure, it should be tested to bear a pressure much greater than that, say three times as much. This pipe may be provided with a safety-valve, and should have a pressure-gauge for indicating the actual pressure. The gas will liquefy at the point where it is the most reduced in temperature. It is therefore necessary that the coil should be kept colder than that in the cooler; to this end the condensing coil is placed in a case, E, (which should be made double and properly protected against external heat,) and kept constantly covered by ice. In this coil the carbonic acid is gradually condensed into a liquid, having about one six hundred and fiftieth part of the bulk of the gas under the ordinary pressure of the atmosphere. From the condenser-coil the

2 Sheets.
Sheet 1

T. S. C. Lowe.

Manuf. of Ice.

No 63,413. Patented Apl 2. 1867.

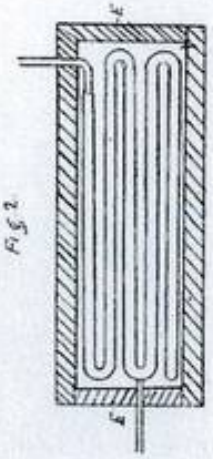

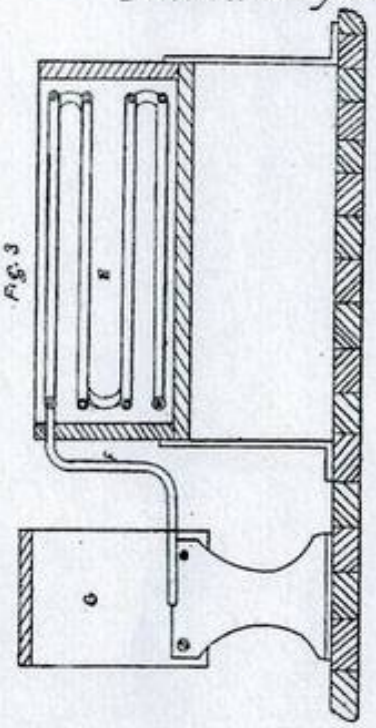

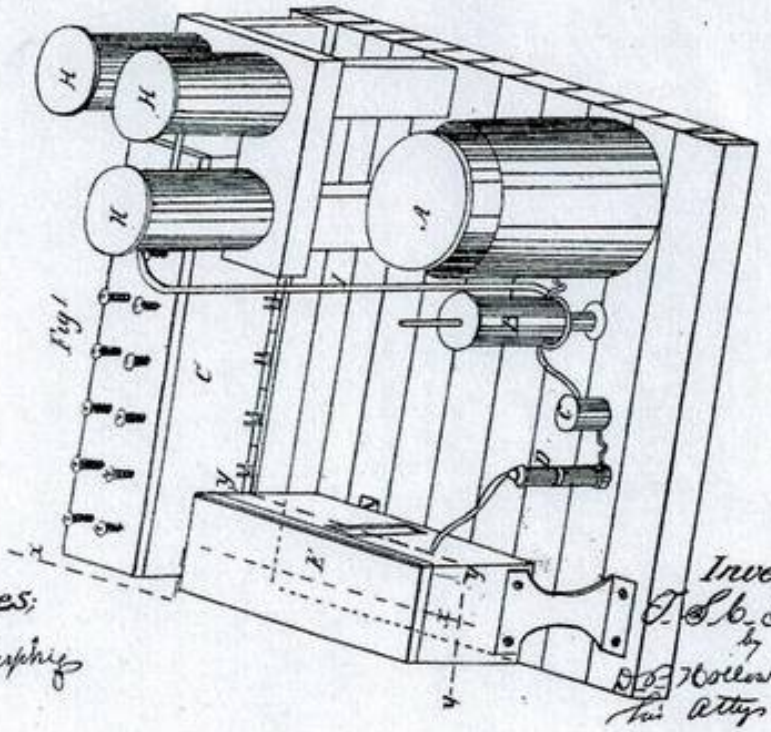

Witnesses:
Robert
L. H. Murphy

Inventor;
T. S. C. Lowe
by
D. Holloway & Co
his attys.

T. S. C. Lowe.

Manuf. of Ice.

No 63,413. Patented Apl 2. 1867.

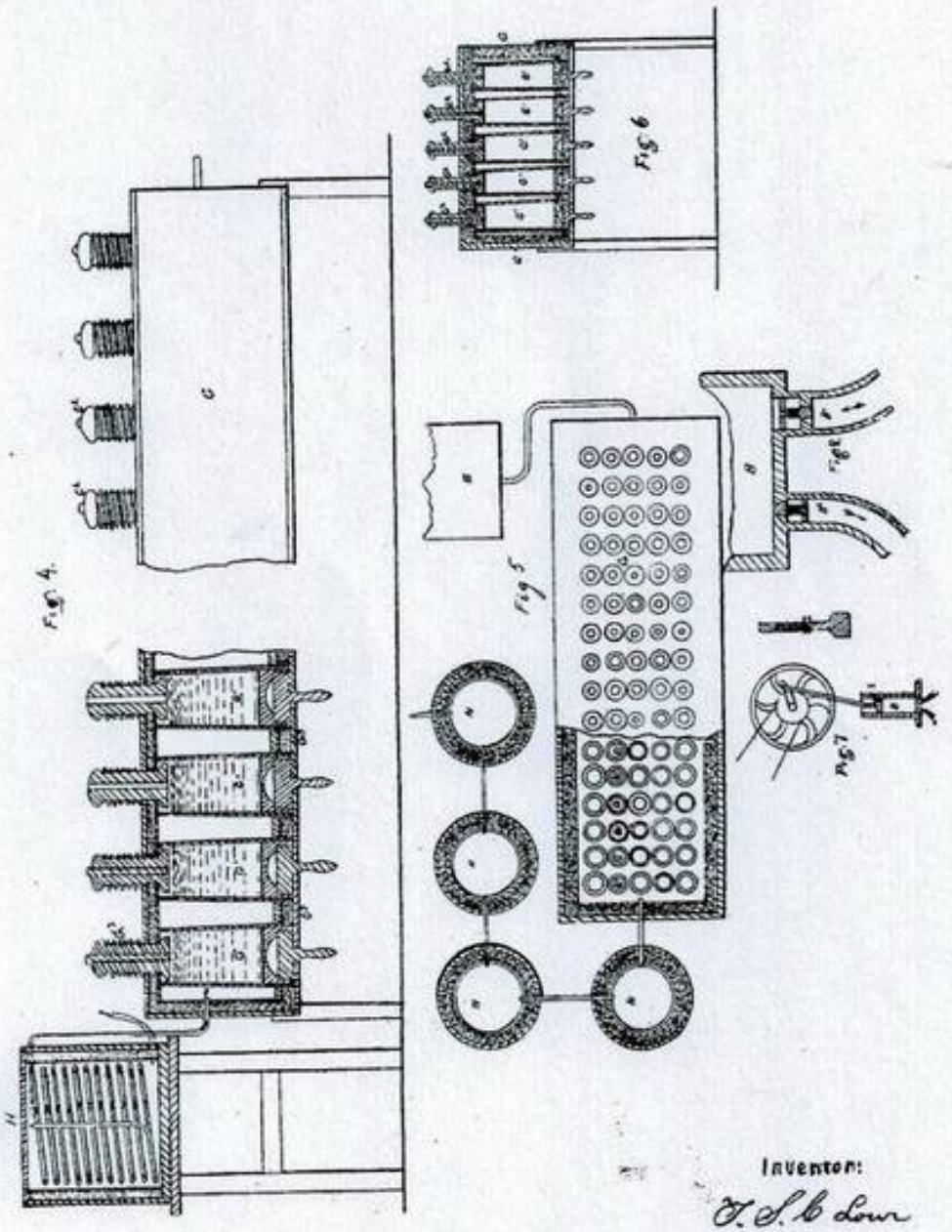

Witnesses.
E. Bunce
L. Murphy

Inventor:
T. S. C. Lowe
by
D. P. Holcombe
his Attyp.


INCORPORATED UNDER THE GENERAL LAWS OF THE STATE OF NEW YORK.

No. 1

1000 SHARES

THE LOWE REFRIGERATED STEAMSHIP COMPANY

SHARES $100 EACH.

CAPITAL $300,000.

OF NEW YORK.

This is to certify, that Thaddeus S. C. Lowe entitled to One Thousand Shares of the Capital Stock of the Lowe Refrigerated Steamship Company transferable on the Books of the Company in person or by Attorney only on surrender of this Certificate.

New York December 21st 1868

Treas. Pres.

In 1868, Lowe endeavoured to set up a Refrigerated Steamship Company, without much success

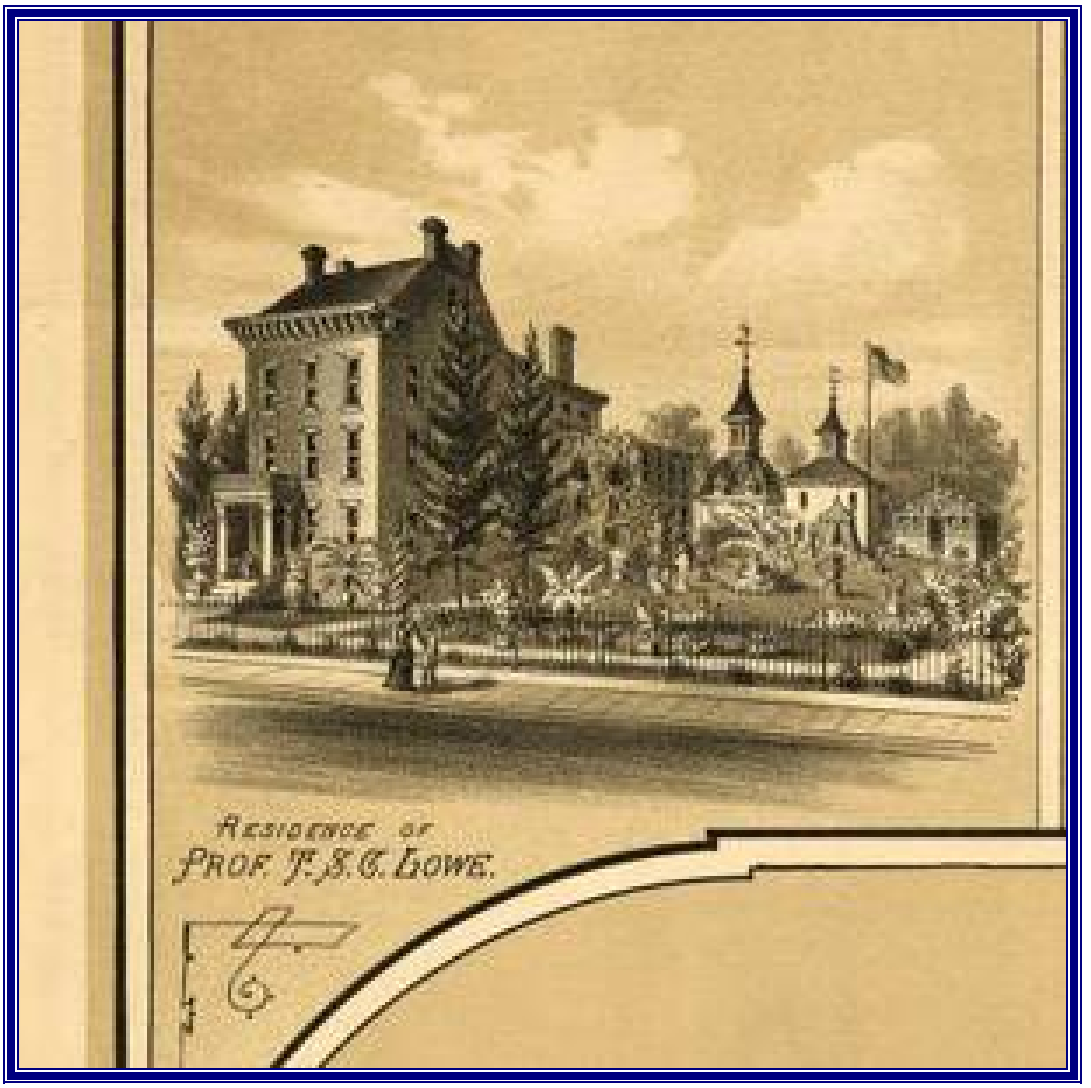

Lowe's house in Pasadena, 1881

Lowe relaxing in his Pasadena garden

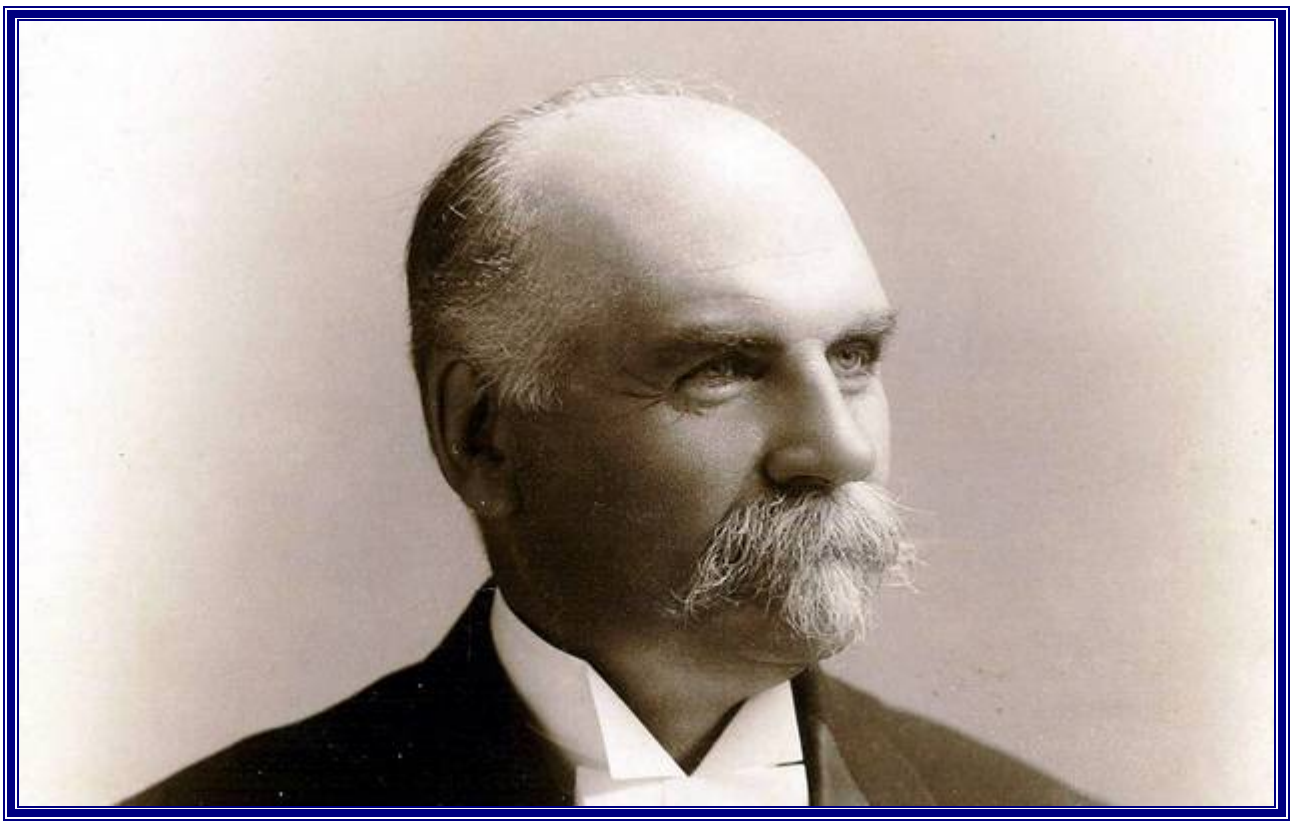

T S C Lowe

References

Dictionary of American Portraits, Dover Publications, New York, 1967

A History of Refrigeration, Roger Thevenot, International Institute of Refrigeration, Paris, 1979

The Civil War: An Illustrated History of the War Between the States: Geoffrey C Ward with Ric Burns & Ken Burns: The Bodley Head London, 1991

Heat & Cold, Mastering the Great Indoors, Barry Donaldson & Bernard Nagengast, ASHRAE, 1994,