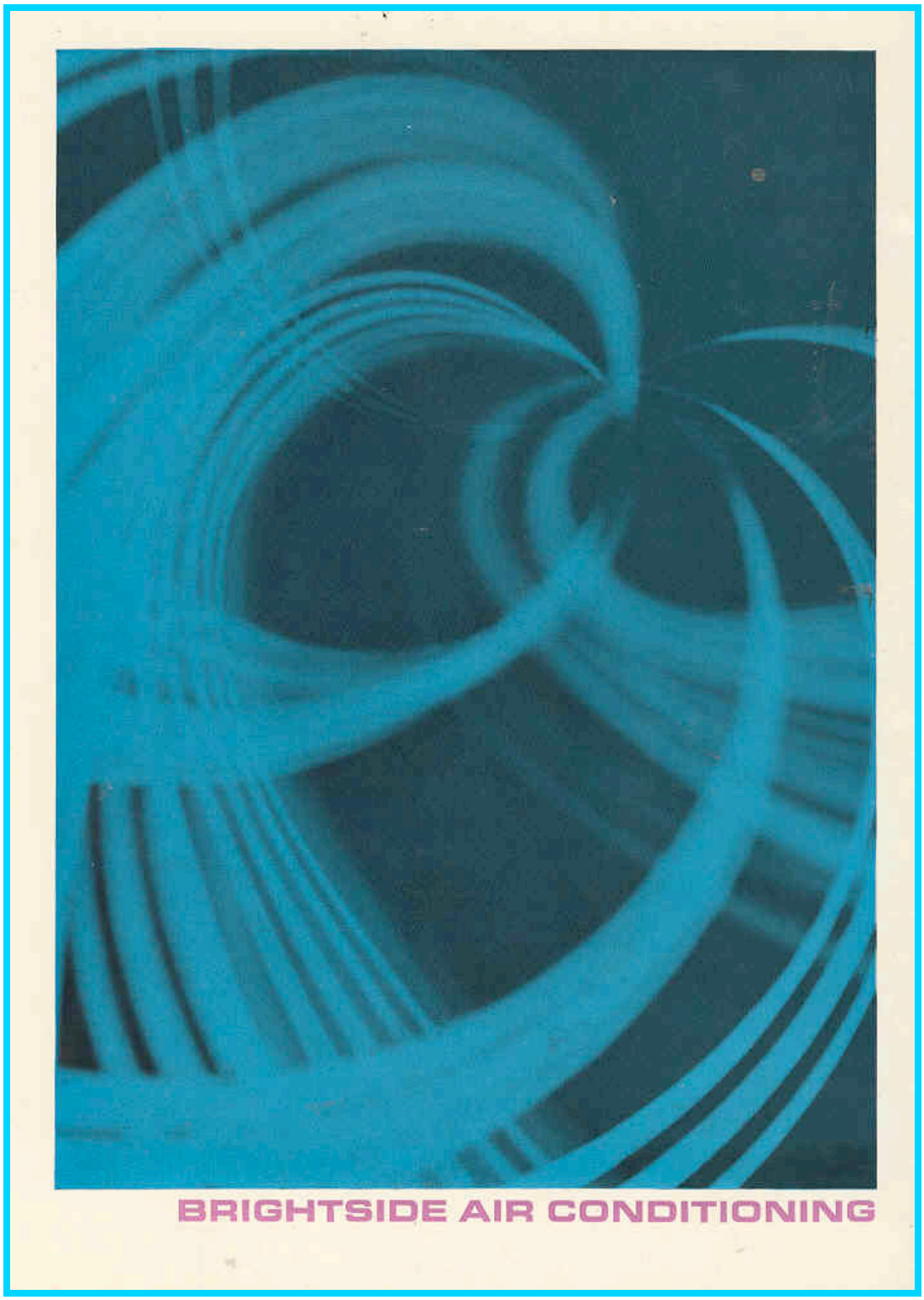

This booklet was written in 1965 by Brian Roberts, now Chairman of the CIBSE Heritage Group while he was Chief Air Conditioning Engineer of Brightside.

Introduction

Maintaining an artificial environment in which people can live and work in comfort, free from the interference of changing weather conditions outside, is becoming an essential factor in the progressively rising living standards of the 1960's.

Brightside have been specialists in the thermal environment for over half a century: this background of experience coupled with the present resources of the Company in design and research means that Brightside is at once the most mature and the most progressive organisation of its kind in the country.

Through their own innovations and a careful study of technological developments in other countries, Brightside have led the field in environmental engineering. The current range of Brightside air conditioning systems includes perimeter induction units, ventilating ceilings, integrated air/light distribution, and packaged heat pumps. These are described in more detail in subsequent pages.

Brightside-designed air conditioning installations for human comfort and process requirements are in use in many parts of this country and in the tropical and semi-tropical areas of the world.

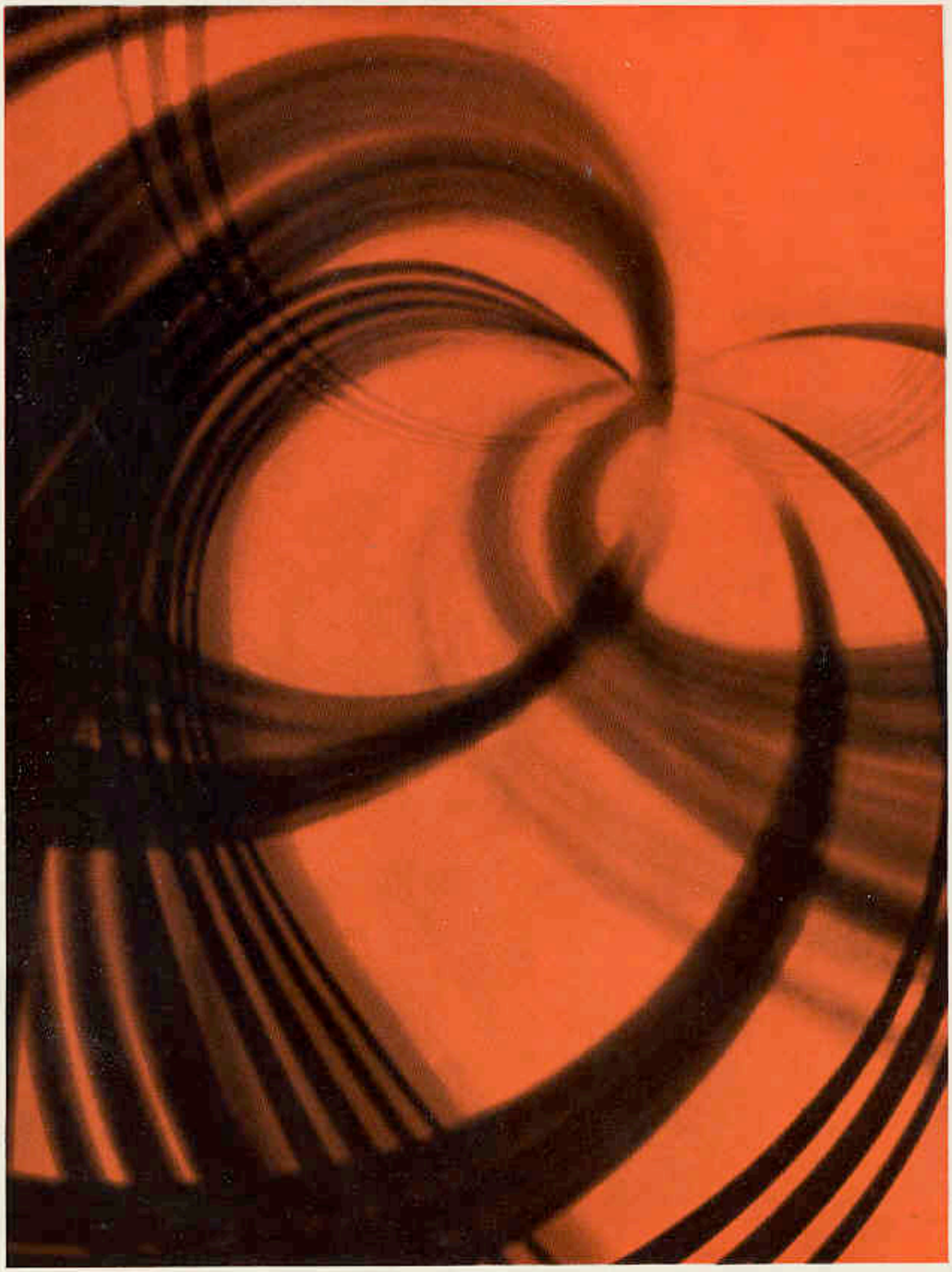

Section 1

Brightside Research Laboratories
What is air conditioning?
The economics of air conditioning

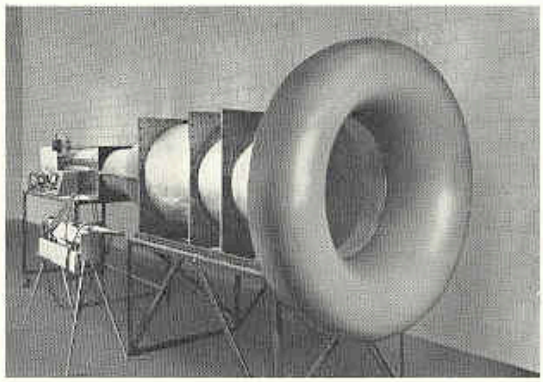

Brightside Research Laboratories

Brightside were the first to realise that the only way to bridge the gulf between fundamental research and its engineering applications was to establish their own applied-science research laboratory. From its beginnings in 1949 with a staff of two working in part of the Birmingham office, the laboratory has grown to its present status with its own building in Portsmouth. The laboratory is well instrumented and its equipment includes a large calorimeter room for appliance testing, steam and hot water generating units, and a wind tunnel.

The Company's central information section is also part of the laboratory. From here the Company is kept abreast of developments in world technology through the publication of Technical Abstracts, a bulletin written from a study of over 100 periodicals. The Research Department library maintains an extensive collection of technical and trade publications.

Atmospheric dust sampling apparatus.
The paper tape machine and its associated equipment is used by the laboratory for automatic recording of atmospheric dust concentration on site

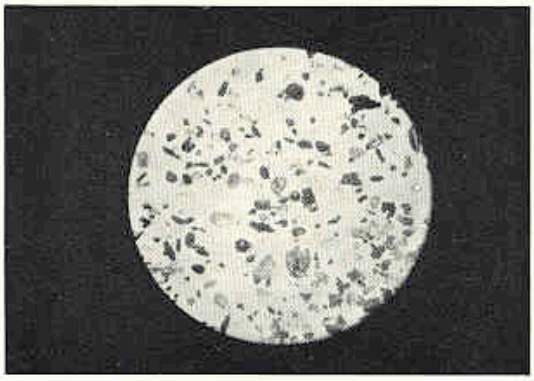

Typical micro photograph of atmospheric dust from C.E.G.B. monograph "The Identification of atmospheric dust by use of the microscope."

What is air conditioning?

The term air conditioning originated in the cotton industry where the idea of producing the right moisture in the fibres by altering the hygrometric state of the air was first envisaged. Since then air conditioning has acquired increasingly broader connotations, and in engineering it has come to mean the control of all those parameters of the atmosphere that play a part in creating an optimum living environment. Thus the temperature of the air is involved as well as its moisture content and the amount of dust it contains. Turbulence - the degree of air movement - is another factor, and of course the air must be free from gaseous contaminants such as sulphur dioxide. To control these variables within prescribed limits at all times of the year needs all the engineering resources of modern air conditioning.

Refrigeration is necessary to cool the air in summer, and in many new buildings it is needed even in winter because of high sun gains through glazing or the heat given off from lighting and electrical equipment. In winter moisture needs to be added to the air and in summer it must be condensed out by the refrigerating plant. The atmospheric dust particles causing the most damage to the building and the people in it are those in the sub-microscopic range. These must be removed with high efficiency filters. Gaseous impurities need the special technique of adsorption for their removal.

Noise is another factor in the environment which air conditioning can help to control. In combination with fixed double-glazed windows it is the only solution to the increasingly serious problem of city traffic noise. The air conditioning system itself is designed to meet specific room noise criteria through the use of duct attenuators and vibration damping.

Air conditioning cost break-down

Building construction	Air conditioning plant	Recurrent costs
Plant rooms	Fans	Fuel
	Filters	
	Heaters	
Shafts	Spray humidifiers	Water
	Cooling coils	
	Silencers	
Suspended ceilings	Refrigerating Machinery	Electric power
	Cooling towers	
	Pumps	
Apertures	Distribution ducts	Spares
	Thermal insulation	
	Ceiling and wall diffusers	
Structural reinforcements	Mixing boxes	Salaries
	Induction units	
	Pipework	
Resilient suspension	Electrical connections	Insurance
	Control systems	
	Instrumentation	
		Plant depreciation

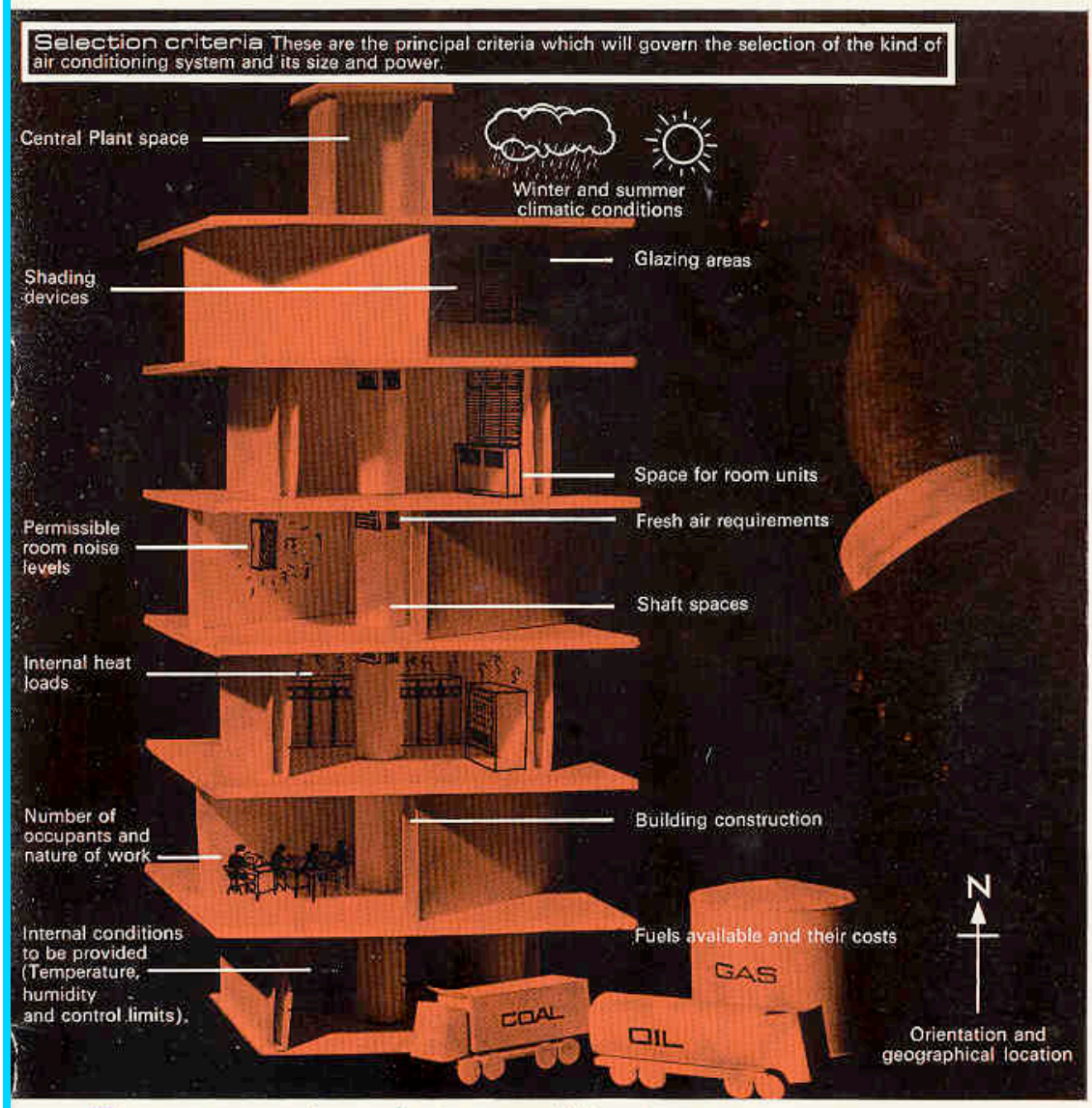

The economics of air conditioning

Any discussion of air conditioning economics must start with the building. Forethought in building design can make very appreciable savings in the installation and running costs of air conditioning. Glazing is the greatest single source of heat gain, and for every square foot of unshaded glass, up to £5 is added to the cost of the system.

Good environmental engineering demands the following building requirements:

* Glazing should be reduced as far as is possible consistent with other considerations such as appearance, lighting and psychological aspects.
* Solar transmission through glazing should be reduced by using outside shading devices such as structural fins, internal blinds, or double glazing with the outer pane in heat-absorbing glass. Not only does this reduce refrigeration and air quantities, it also attenuates glare and the direct effect of the sun's radiation on the occupants.
* Insulation should be added to walls and ceilings: U-values in the region 0.20 to 0.25 are not difficult to achieve.
* Light coloured external surface finishes are desirable because these produce a high degree of solar heat reflection.
* High artificial lighting levels involve high heat output. The lighting criteria should be carefully examined in the project stage. Provision may be made for air extraction through light fittings into a ceiling plenum: this technique removes the high grade heat at its source.
* Outdoor air requirements should be limited to the accepted standards: air in excess of this only increases refrigeration plant size. The range of variation in air requirements for general office spaces for instance, is 0.15 to 0.35 ft^3/min ft^2 of floor area.

Section 2 / Air conditioning techniques

The various techniques of air conditioning fall into three generic groups □ these and their sub-divisions can be seen in the following diagrams

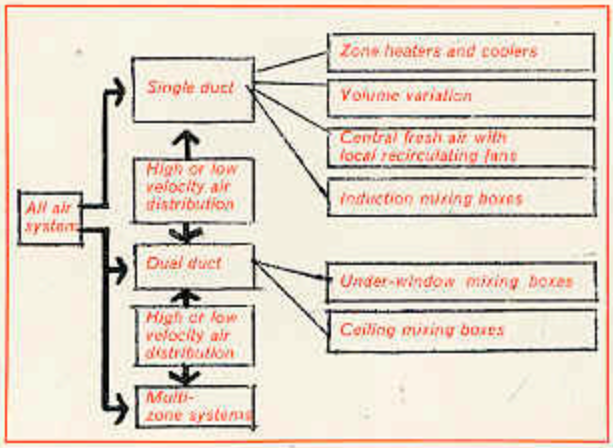

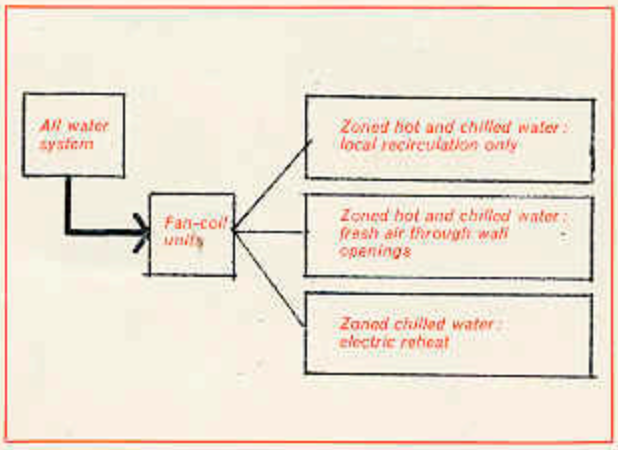

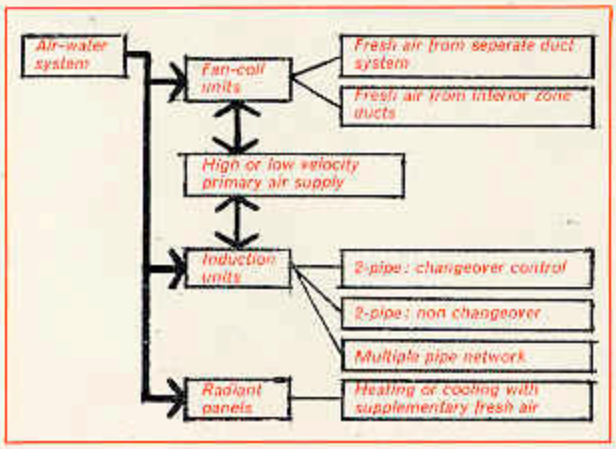

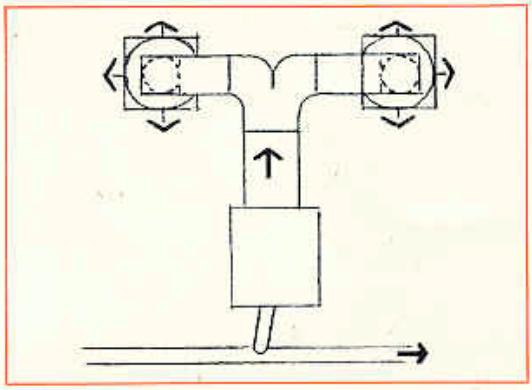

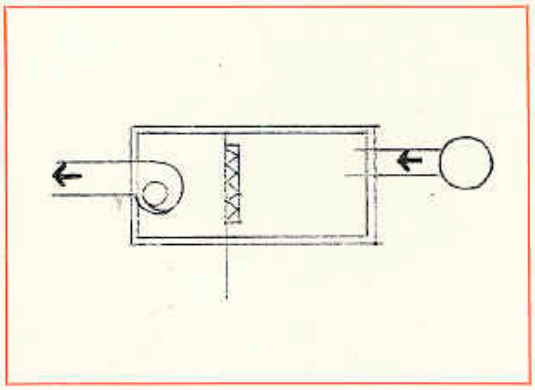

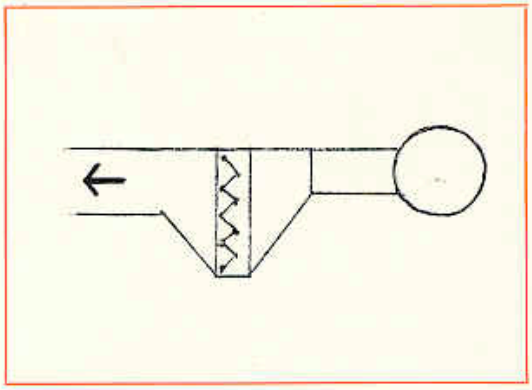

The single-duct system

From the central plant room, a single duct is used to distribute the conditioned air. This means, of course, that all rooms receive air at the same temperature and moisture content. Thus in its simplest form the single-duct system must meet different room loads by supplying different quantities of air, e.g. sunlit rooms in summer need more cool air than those in the shade. When these loads fluctuate, however, room temperatures cannot be held steady. This objection is minimised either by the use of local heater and cooler batteries, or by automatically varying the air supply rate to meet the changing load. Individual rooms, or larger zones consisting of a number of rooms with similar heating or cooling requirements, can be treated in this way.

In its original conception the single-duct system employed air velocities of not more than 2000 ft/min, but later developments in acoustics, fan engineering and duct construction made it possible to extend this limit to about 5000 ft/min. The greatly reduced duct sizes saves in building space, and in large modern blocks with extensive duct networks the high velocity system is the solution most frequently adopted.

Low velocity distribution is still employed, of course, where space limitations are not critical, such as in industry.

In both systems either one central plant room or several multiple zone plant rooms can be used. The boiler plant and refrigerating machinery may be remote from these if necessary.

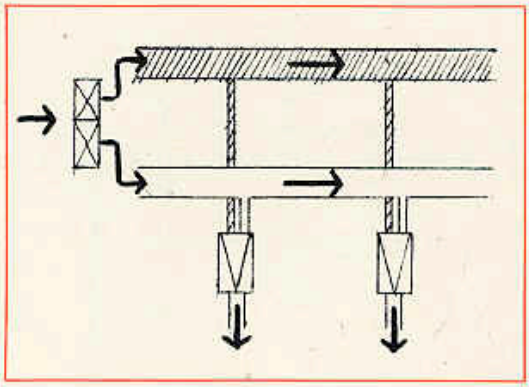

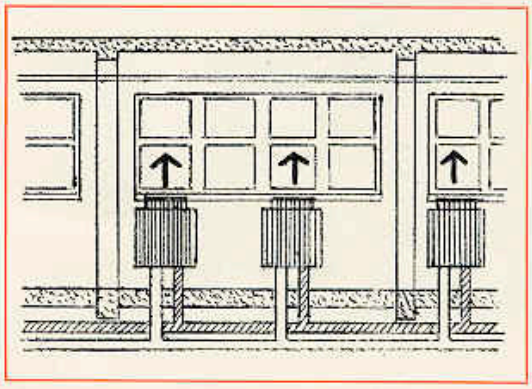

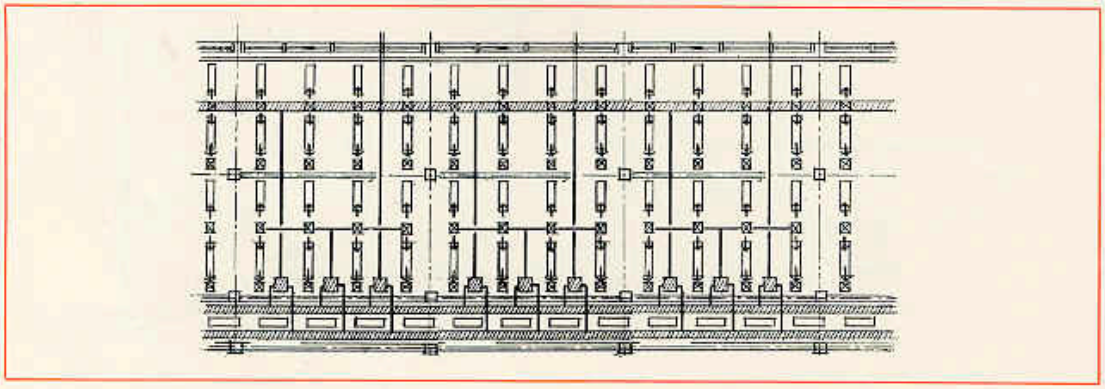

Dual-duct system

In this system the central plant room supplies air through two separate ducts running in parallel. The air in one is heated and in the other it is chilled. By mixing air from the two ducts any temperature between these limits can be obtained.

Connections are taken to special mixing boxes with motor-operated dampers which blend the two air streams together in the correct proportions according to the signal from the room thermostat. In this way every room if necessary can have its own independent temperature selection and the total air supply rate will remain substantially constant.

In practice the cold duct carries air some 20 to 25 degF lower than the room temperature, and in the heated duct the temperature is just above the room optimum. In winter, refrigeration is not normally needed for the cold duct, and the heated duct temperature is progressively raised as the outside temperature falls.

Room humidity can be kept within the comfort zone by the dual-duct system at all times.

The system of distribution generally takes the form of horizontal ducts in suspended ceilings with concealed mixing boxes and ceiling diffusers. In this way, no floor space is taken up.

In cold climates where only single-glazed windows are used, some supplementary form of heat - such as skirting heating - is necessary along the building perimeter. Alternatively, under-window units can be placed at the building perimeter, the arrangement being fitted in with the building module.

Air for recirculation in the central plant can be taken by way of the building corridors into a few collection points on each floor of the building. The recirculated-air ducts normally run at low velocity.

The dual-duct system will satisfactorily handle fluctuating loads in both perimeter and internal zones. Control response is rapid and the system is flexible enough to permit changes in internal partitioning.