Chapter 11
AUTOMATIC CONTROL

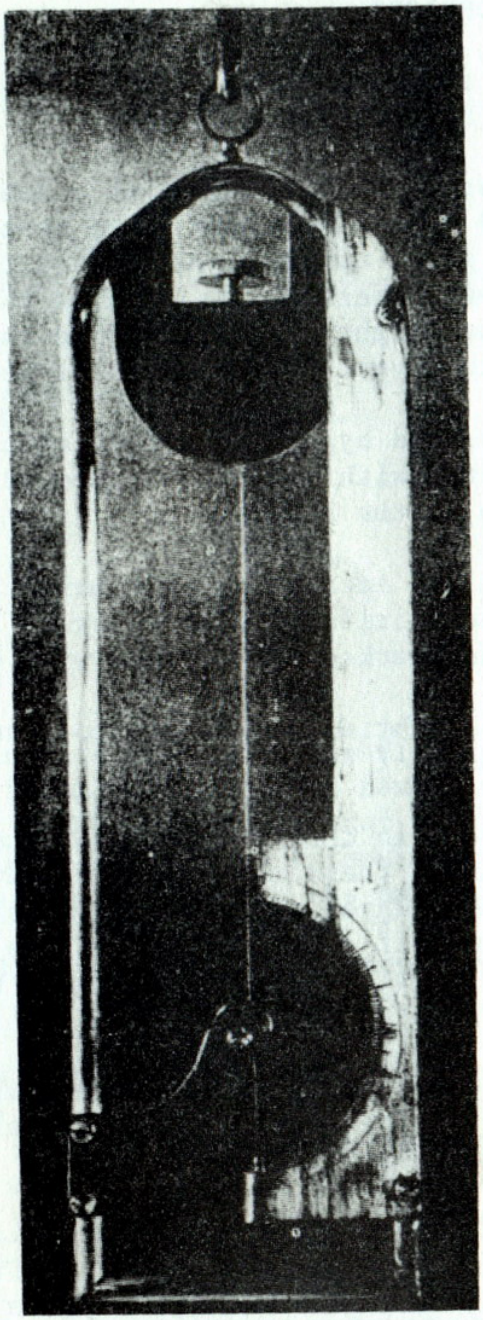

(Fig. 11.1. Hair hygrometer (de Saussure, 1780).

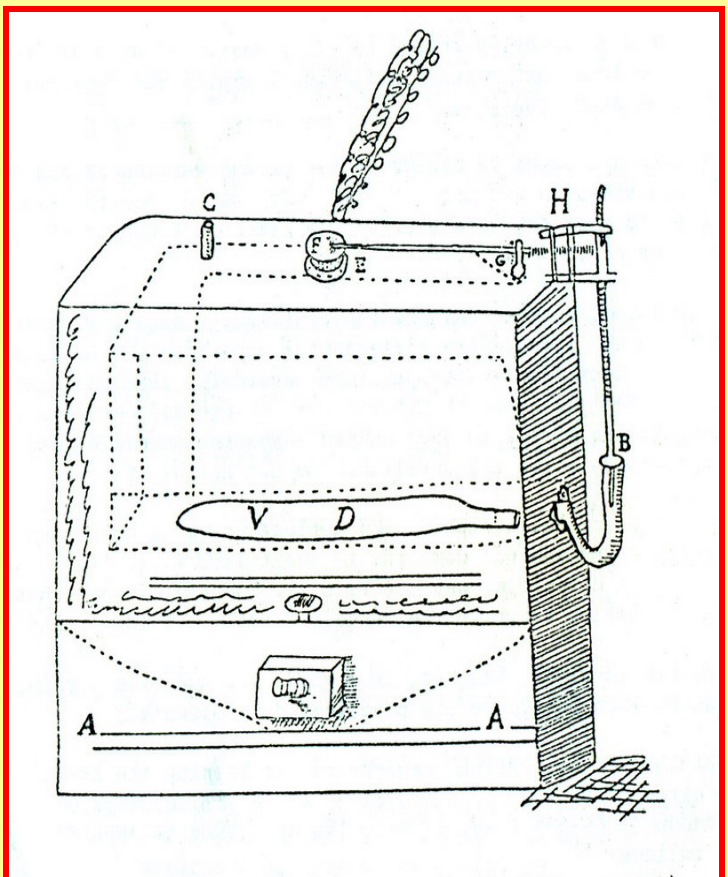

Fig. 11.2. Drebbel's thermostat (early 17th century).

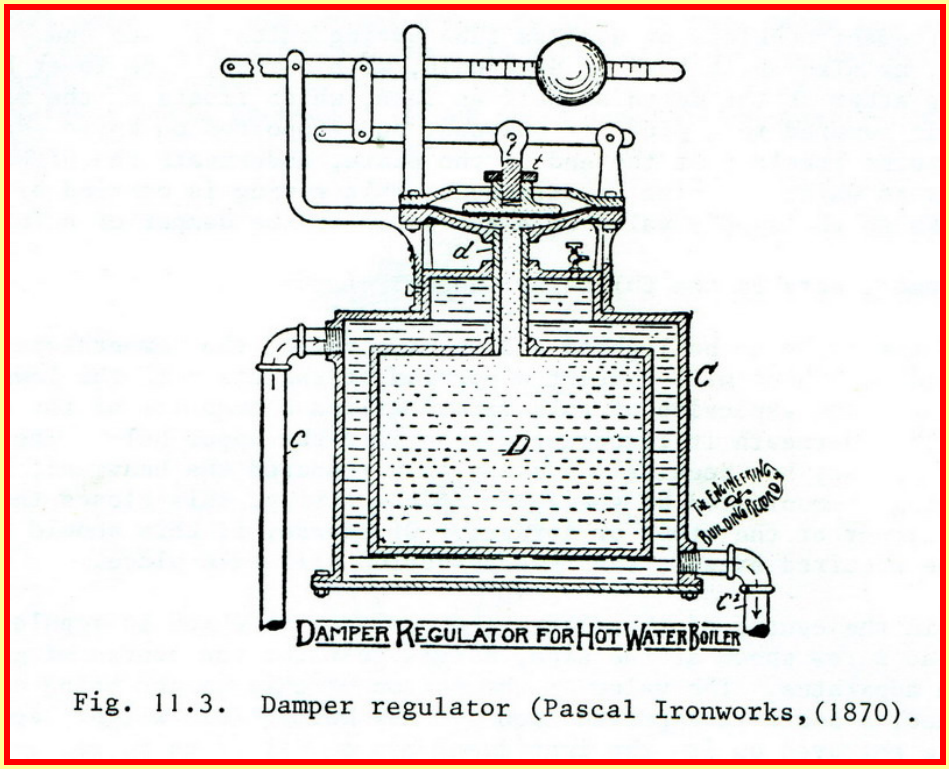

Fig. 11.3. Damper regulator (Pascal Ironworks,(1870).

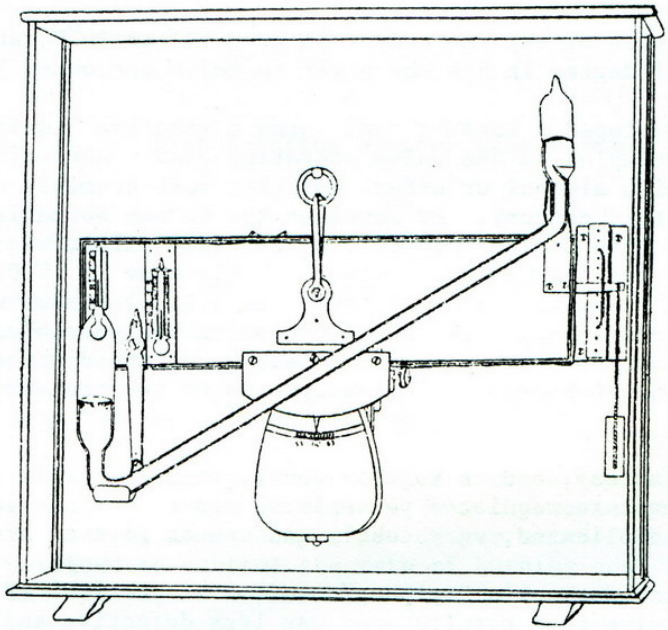

Fig. 11.4. Appold's apparatus for regulating temperature and keeping the air in a building at any desired degree of moisture (1866).

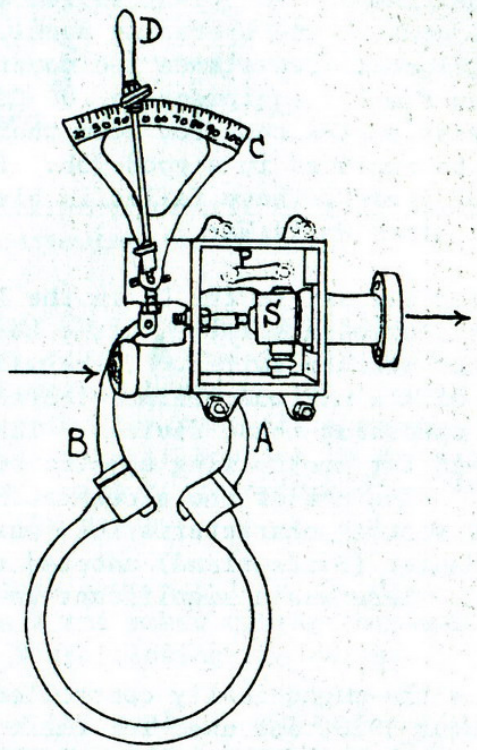

Fig. 11.5. Direct-acting Bourdon-tube thermostat.

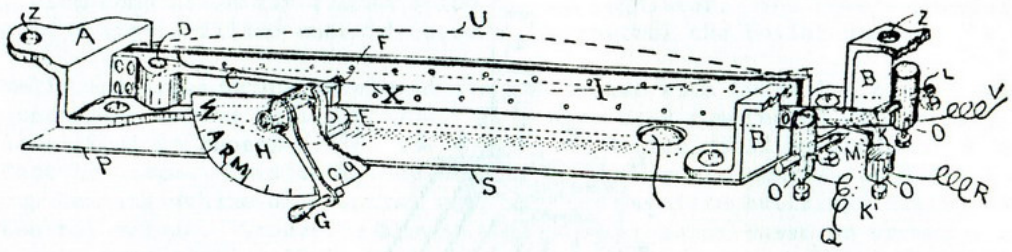

Fig. 11.6. Electro-pneumatic control system — the electric thermostat (*ca.* 1890).

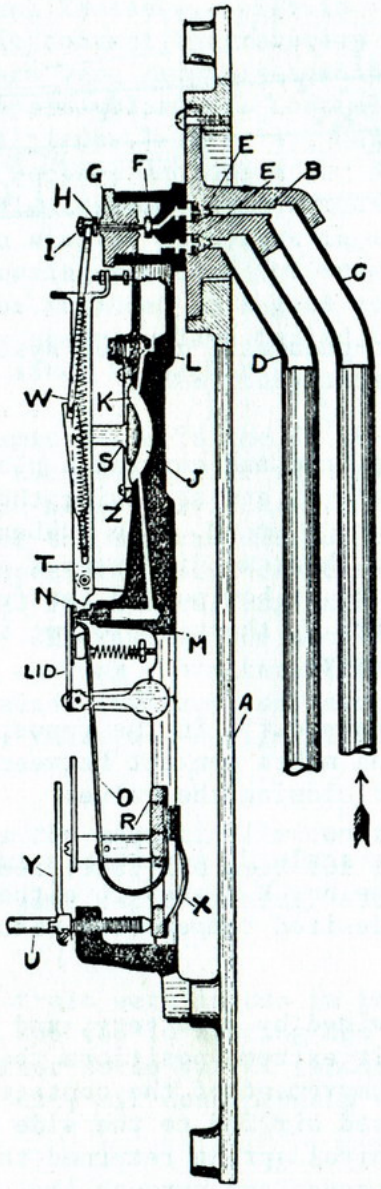

Fig. 11.7. Johnson pneumatic bimetal thermostat (*ca.* 1912).

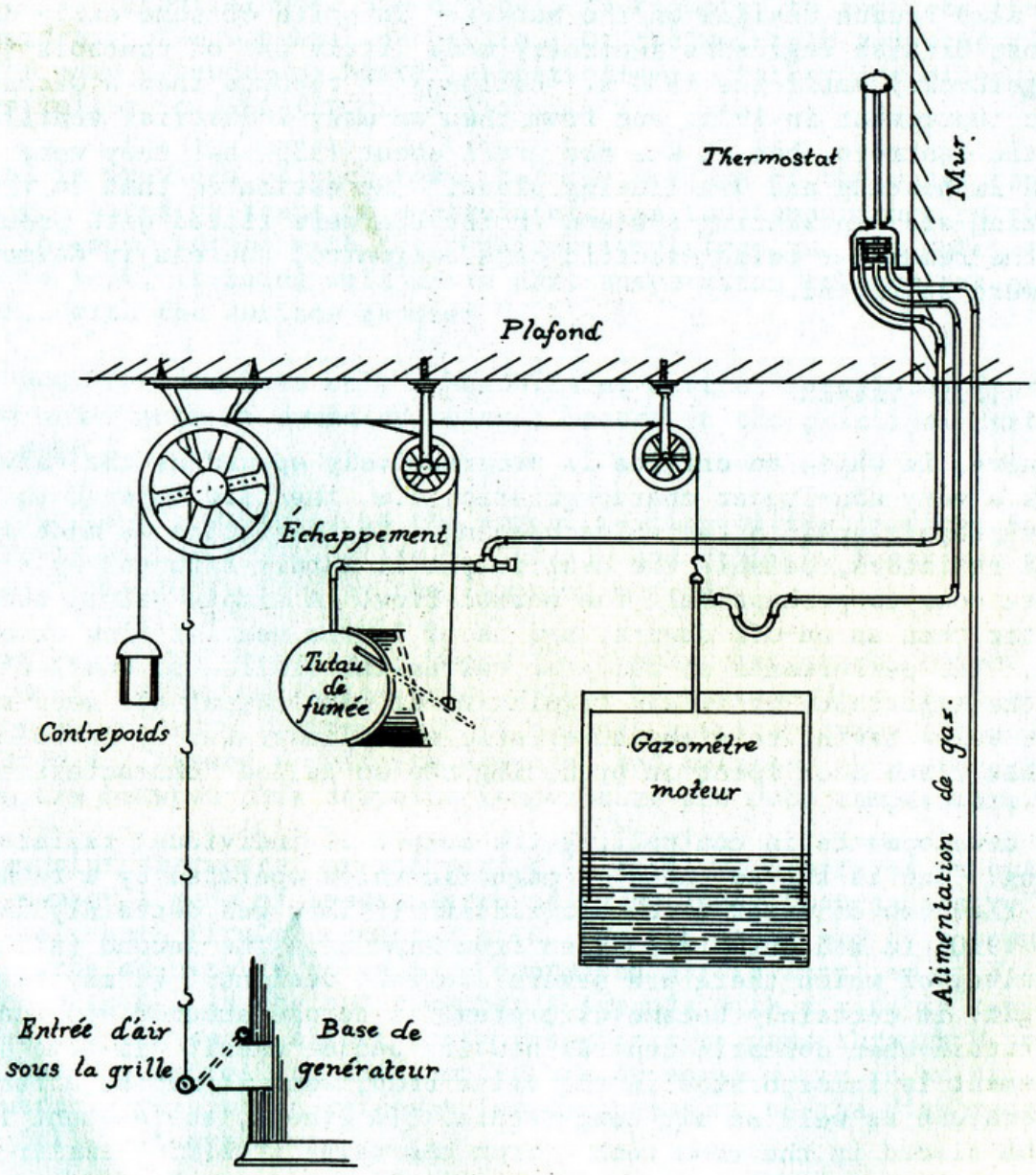

Fig. 11.8. Primary air control/draught control by thermostat operating on town's gas (*ca.* 1900).

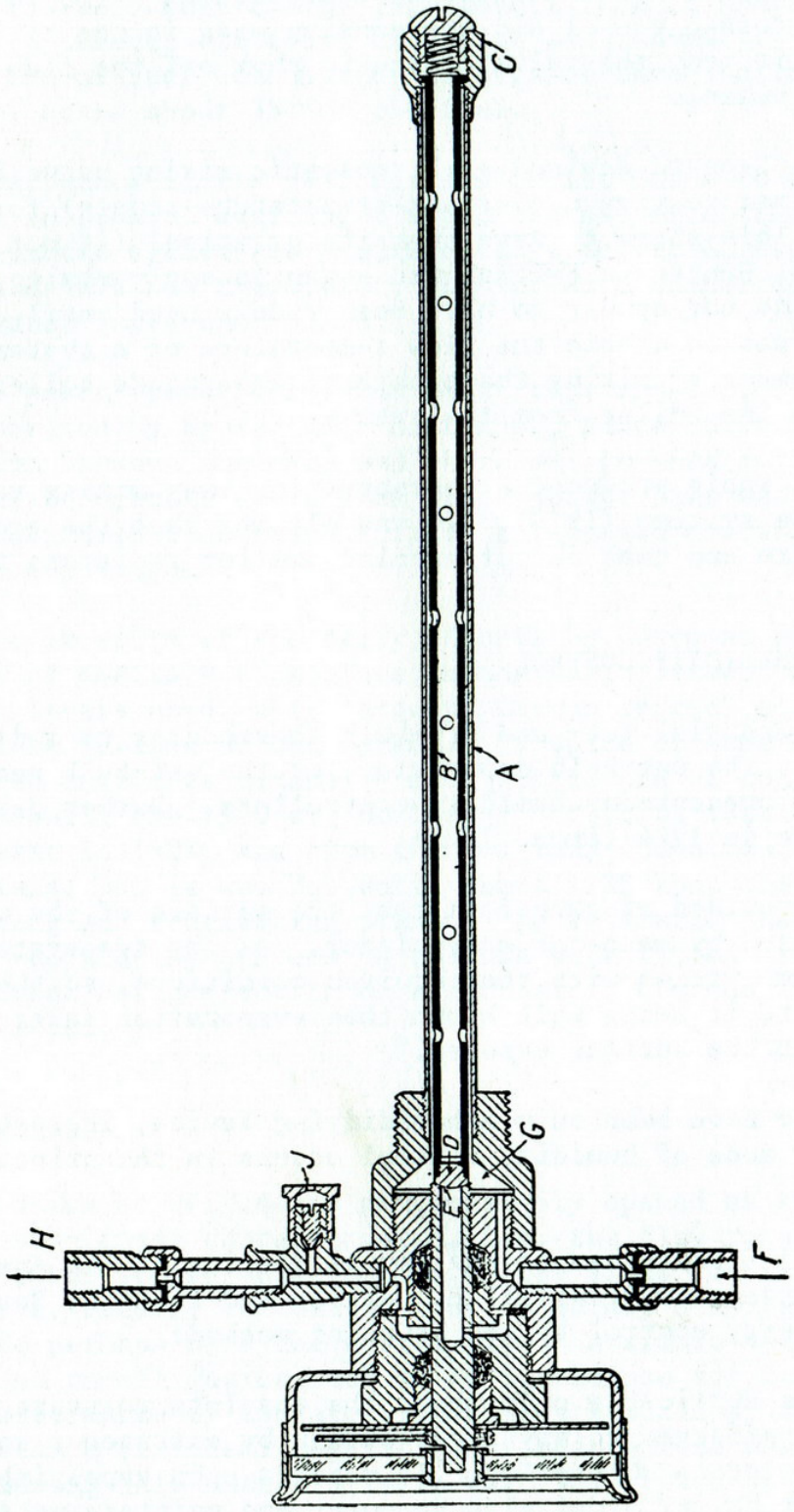

Fig. 11.9. Dewpoint thermostat (1911).

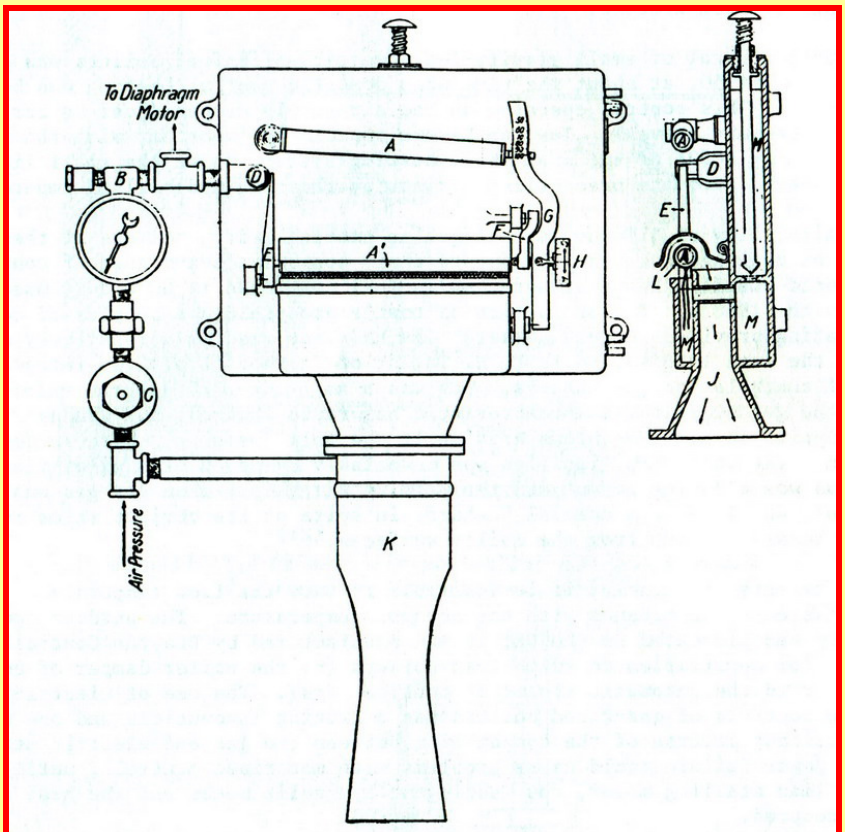

Fig. 11.10. Carrier differential hygrostat (1911).

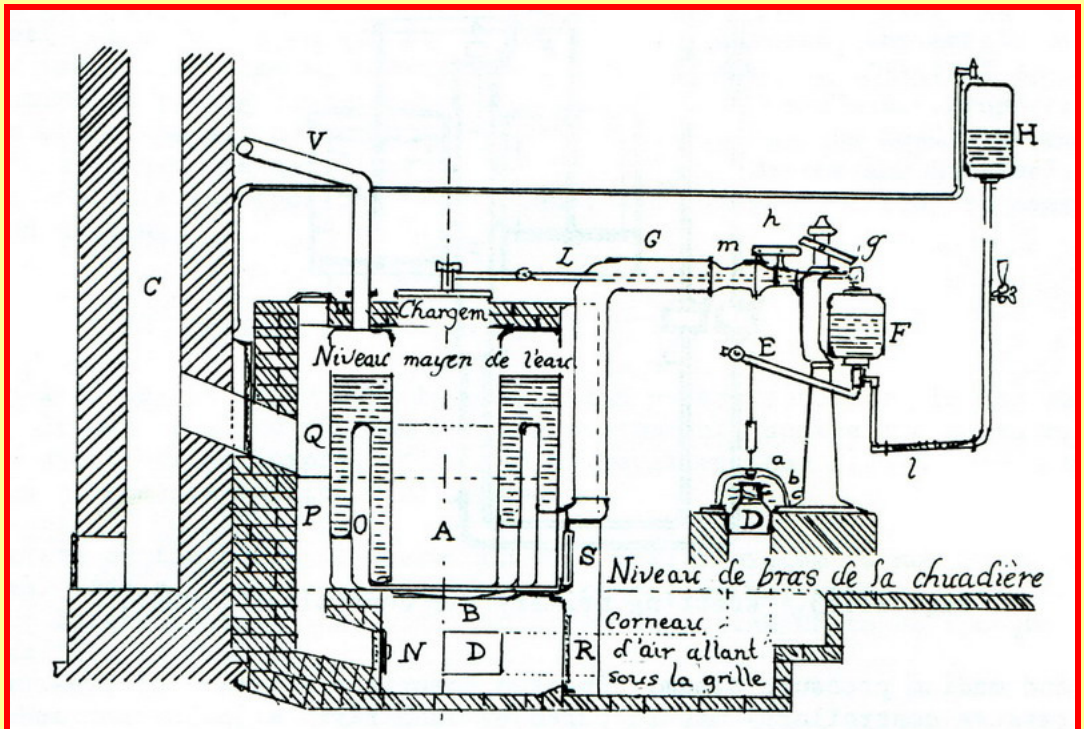

Fig. 11.11. Primary air controller for low-pressure steam boilers (Monnot, 1884).

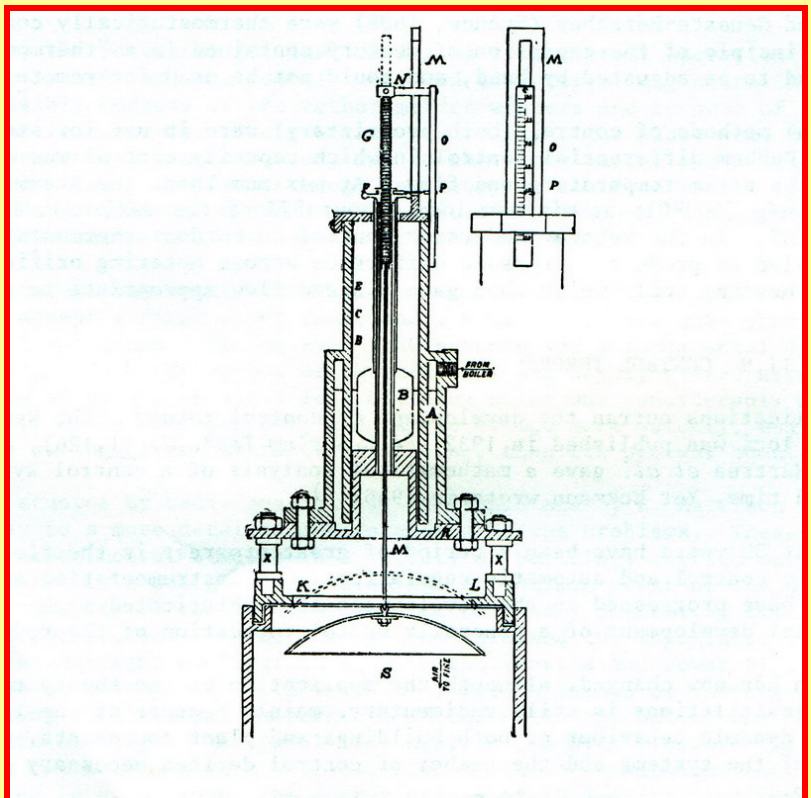

Fig. 11.12. Koerting primary air controller (mercury) for steam boilers (1890).

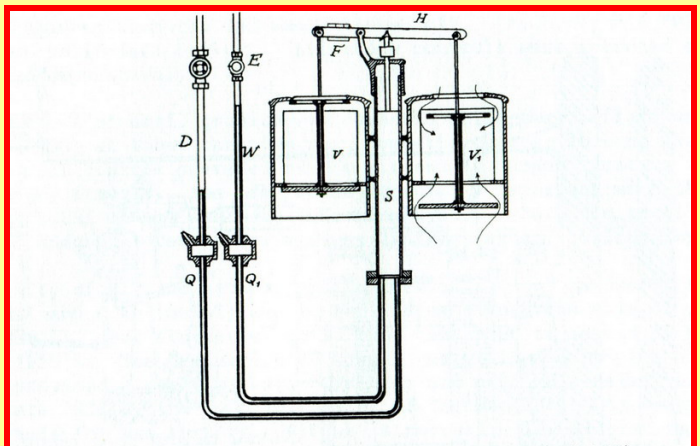

Fig. 11.13. Koerting primary air controller (1906).

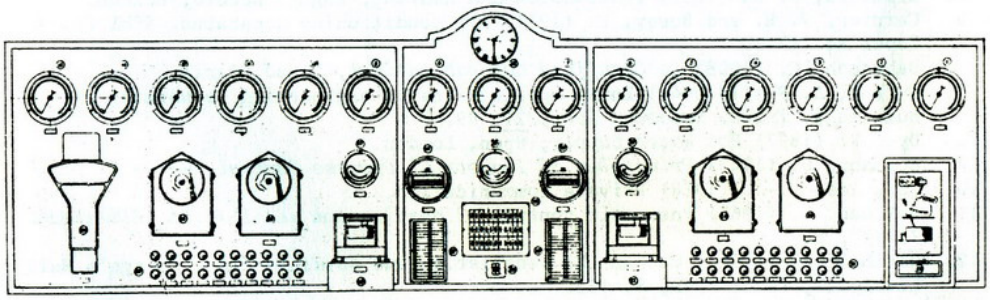

Fig. 11.14. The monitoring panel in the Masonic Peace Memorial Building, London (1933).

REFERENCES

1. Anon (1965) *Energy*, Life Science Library.
2. Anon (1966) *Weather*, Life Science Library.
3. Anon (1932) *Zur 25-jahrigen Bestehen 1906-31*, Verein Schzeiz. Centralheizungs Industriellen, Zurich.
4. Billings, J. S. (1896) *Ventilation and Heating*, Engng. Record, London.
5. Carrier, W. H. and Busey, F. (1911) Air conditioning apparatus, *ASME Trans*, Paper No. 1341.
6. Debesson, G. (1908) *Le Chauffage des Habitations*, Dunod, Paris.
7. Dufton, A. F. (1940-41) Early applications of engineering to warming of buildings, *Trans. Newcomen Soc.*, 21, 99.
8. Dye, F. (1897) *Hot Water Supply*, Spon, London.
9. Eckmann, D. (1945) *Principles of Industrial Process Control*, Wiley.
10. Gartside, M. J. (1978) Private communication.
11. Hollman, W. (1965) Pneumatic control of heating and ventilation, *Klimatech.*, 7, (2), 8.
12. Honiball, C. (1907) Mechanical ventilation and warming of St. George's Hall, Liverpool, *Proc. IHVE*, 8, 153.
13. Jackson, S. B. (1946) Thermionic valve control of heating and ventilating installations, *JIHVE*, 14, 21.
14. Jackson, T. B. (1971) Theory and economics of optimum start programming of heat plant, *JIHVE*, 39, A24.
15. Knuth, C. (1907) Central heating and ventilating plant of Stock Exchange, Budapest, *Proc. IHVE*, 8, 81.
16. Mayr, O. (1976) Origins of feedback control, *Sci. American*, (Oct.).
17. Naylor, S. (1902) Low pressure steam heating, *Proc. IHVE*, 3, 97.
18. Picard, Ph. (1897) *Chauffage et Ventilation*, Baudry, Paris.
19. Ramsey, A. R. J. (1945) The thermostat or heat governor - an outline of its history, *Trans. Newcomen Soc.*, 25, 53.
20. Roberts, B. M. (1976) Electronic controls for heating and air conditioning, *Electrotech.* (Jan.).
21. Taylor, F. M. H. (1978) Private communication.
22. Tomlinson, C. (1850) *Rudimentary Treatise on Warming and Ventilation*, Weale, London.
23. Wildish, D. G. (1962) A controller for electric thermal storage systems, *H. V. Engr.* (Jan.), 367.